CUT SHEETS
ARCHITECTURAL MATERIALS

Table of Contents

1 – Brick 1 + Grout
2 – Brick 2 + Grout
3 – Brick 3 + Grout
4 – Architectural Precast Concrete Panels (Product + Color)
5 – Window Systems (Product + Color)
6 – Window Systems (Product + Color)
7 – Storefront Framing System
8 – Storefront Framing System
9 – Storefront Doors
10 – Storefront Doors / Hardware
11 – Architectural Glass
12 – Sheet Metal Sun Visors, Eye Brows and Metal Wall Shingles (Product)
13 - Sheet Metal Sun Visors, Eye Brows and Metal Wall Shingles (Color)
14 – Architectural Screen
15 – Cement Board Siding with Reveals
16 – Cement Board Siding with Reveals
17 – Cedar Canopy
18 – Light Fixture: Pedestrian/Security Bollard
19 – Light Fixture: Downlight (Recessed)
20 – Light Fixture: Pedestrian Scale Parking Lot
21 – Light Fixture: Wall Mounted Egress
22 – Light Fixture: Cylindrical Sconce Up/Down Light (Upper Floors)
23 – Light Fixture: Cylindrical Sconce Down Light (Upper Floors)
24 – Light Fixture: Street Light
25 – Balcony / Railings

BRICK 1
CHEROKEE ROMAN SMOOTH
CLOUD CERAMICS

Home | Brick Matching | Projects | Sizes | How to Order | About Us | LEED Contribution

BROWSE OUR BRICK

Styles
- Overview
- Architectural
- Residential
- Paving Units

Colors
- Overview
- Buffs
- Browns
- Reds
- Pinks
- Ironspots
- Greys

Textures

Phone:
785-243-1284

Fax:
785-243-1287

Mail:
Cloud Ceramics
PO Box 369
Concordia, KS 66901

Cherokee

brick 1

TEST REPORT-CL BURG 2013>
MSDS Information>
Cleaning Recommendations>

Textures:
- Antique
- Shadowtex
- Velour
- Vertex
- Wiretex
- Smooth

Sizes:
- Closure
- Kingsize
- Modular
- Norman
- Roman
- Utility

Standard 3/8" Concave Mortar Joint

[raw]

Grout Selection - Mushroom Grout

CAD-ready texture tile with White grout Download

Click for larger image

[/raw]

How do I place an order?

Projects that use this brick

Colors shown are intended as a guide only and may vary. To ensure color accuracy call for a sample.
All material © 2006 by www.cloudceramics.com. All rights reserved.
info@cloudceramics.com

BRICK 2
CRIMSON IRONSPOT ROMAN SMOOTH
CLOUD CERAMICS

Home | Brick Matching | Projects | Sizes | How to Order | About Us | LEED Contribution

BROWSE OUR BRICK

Styles
- Overview
- Architectural
- Residential
- Paving Units

Colors
- Overview
- Buffs
- Browns
- Reds
- Pinks
- Ironspots
- Greys

Textures

Phone:
785-243-1284

Fax:
785-243-1287

Mail:
Cloud Ceramics
PO Box 369
Concordia, KS 66901

Crimson Ironspot

brick 2

TEST REPORT-CL TERRA 2013>
MSDS Information>
Cleaning Recommendations>

Textures:

Shadowtex
Smooth
Velour
Vertex
Wiretex

Sizes:

Closure
Kingsize
Modular
Norman
Roman
Utility
4" x 8" x 2 1/4 Paver
4" x 8" x 2 1/4 Chamfered Paver

Standard 3/8" Concave Mortar Joint

[raw]

Grout Selection - Mushroom Grout

CAD-ready texture tile with White grout Download

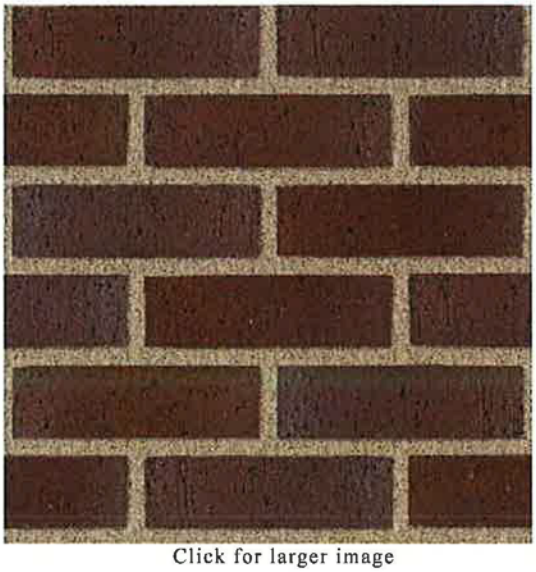

Click for larger image

[/raw]

Projects that use this brick

How do I place an order?

Colors shown are intended as a guide only and may vary. To ensure color accuracy call for a sample.
All material © 2006 by www.cloudceramics.com All rights reserved
info@cloudceramics.com

web print

BRICK 3
SAHARA LIGHT BUFF CLOSURE VELOUR
CLOUD CERAMICS

Home | Brick Matching | Projects | Sizes | How to Order | About Us | LEED Contribution

BROWSE OUR BRICK

Styles
- Overview
- Architectural
- Residential
- Paving Units

Colors
- Overview
- Buffs
- Browns
- Reds
- Pinks
- Ironspots
- Greys

Textures

Phone:
785-243-1284

Fax:
785-243-1287

Mail:
Cloud Ceramics
PO Box 369
Concordia, KS 66901

TEST REPORT-CL BUFF 2013

sahara light buff

brick 3

TEST REPORT-CL BUFF 2013>
MSDS Information>
Cleaning Recommendations>

Textures:
- Rockface
- Shadowtex
- Velour
- Vertex
- Wiretex

Sizes: Closure, Kingsize, Modular, Norman, Roman, Utility

Standard 3/8" Concave Mortar Joint

[raw]

Grout Selection - Mushroom Grout

CAD-ready texture tile with White grout Download

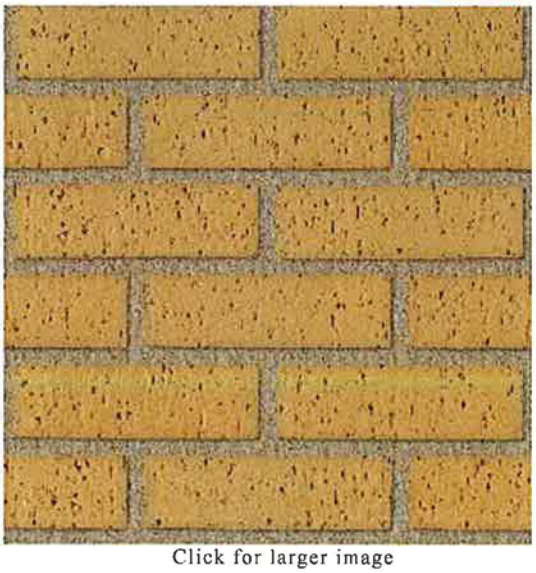

Click for larger image

[/raw]

How do I place an order?

Projects that use this brick

Colors shown are intended as a guide only and may vary. To ensure color accuracy call for a sample
All material © 2006 by www.cloudceramics.com. All rights reserved.
info@cloudceramics.com

ARCHITECTURAL PRECAST
CONCRETE PANELS
COLOR: OAK RIDGE
CHAMFER / SMOOTH FINISH

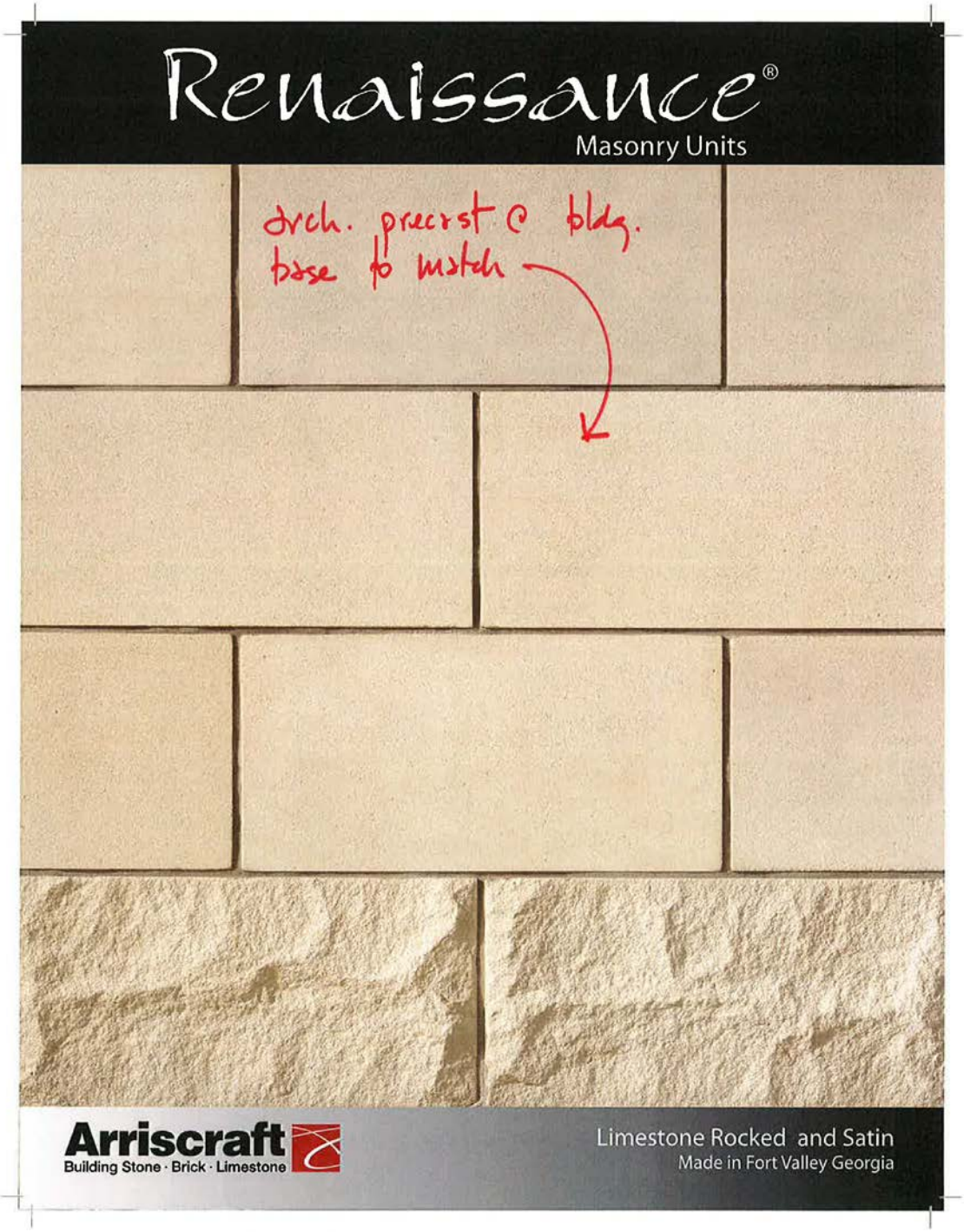

WINDOW SYSTEMS
(PRODUCT + COLOR)

COLOR:
MEDIUM BRONZE

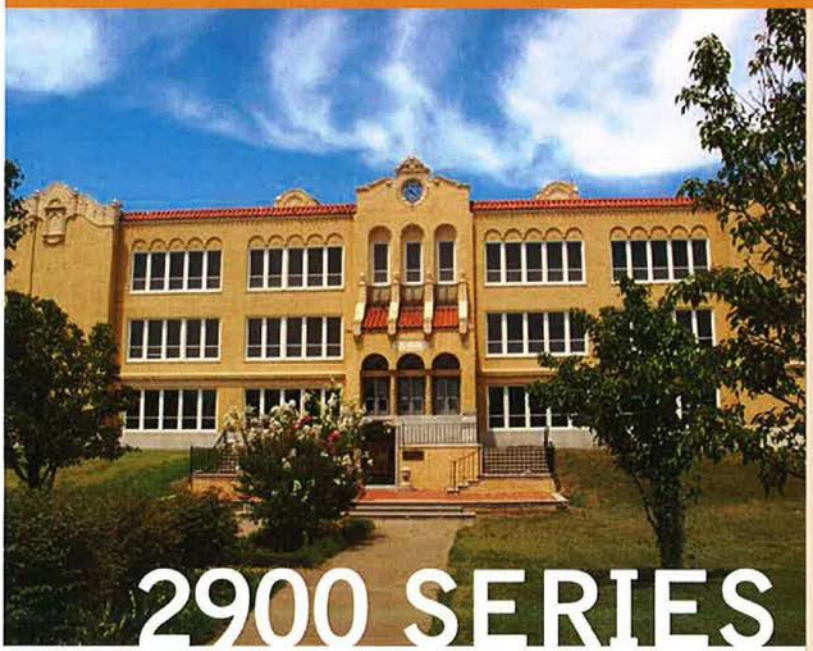

2 1/2" ARCHITECTURAL GRADE

Fixed, Projected, and Casement Window System
(F-AW100, AP-AW80, C-AW80)

This heavy duty window system was designed for the "flush" appearance of the sash and frame with a beveled "historical replica" exterior glazing leg. The sightline of the fixed main frame is 1 1/2". The 2900 series carries AAMA Architectural Window Class (AW) Certification. The frame and operating sash depths are 2 1/2". Multiple snap trim sizes are available. Perimeter receptor systems and a full range of pannings (standard and/or custom) are also available. The flush sash design minimizes air infiltration. Principal wall members are .125" thick at structural areas. Main frame sashes use mechanically joined, angle reinforced, mitered corner construction. Square interior removable glass stops accommodate 1" glazing infills. This product and its accessories employ an integral structural thermal barrier that maximizes thermal performance. Applied muntins complete the historical look of both wood and steel windows.

FEATURES

2900

- Structurally tested per ANSI/AAMA 101
- Life cycle tested per AAMA 910
- Forced Entry Resistance Level 10
- Flush vent construction
- Integral structural thermal barrier
- Beveled Historical replica exterior glazing leg
- Dual EPDM weathering at operating sash
- Angle reinforced vent corner joinery
- Pre-glazed at factory
- 1" glazing infills
- Equal or unequal leg frames
- Vertical or horizontal stacking
- Full range of anodized finishes
- Full range of architectural painted finishes
- Spandrel and composite glazing panels
- Extruded screen frames
- Aluminum screen wire
- Wide variety of locking, operating, and hinging hardware
- True, applied, and between glass muntins
- Hermetically sealed units integral blinds
- Custom configurations with standard details
- Standard/custom panning systems
- Interior snap trims

800 Hayes Drive
Manhattan, KS 66502
Phone: (800) 642.1488
Fax: (800) 576.2656

MANKO WINDOW SYSTEMS INC.

11000 East 51st Ave., Suite B
Denver, CO 80239
Phone: (888) 642.1488
Fax: (303) 375.0669

Please visit:
www.mankowindows.com
for more information

COLOR:
MEDIUM BRONZE

2900

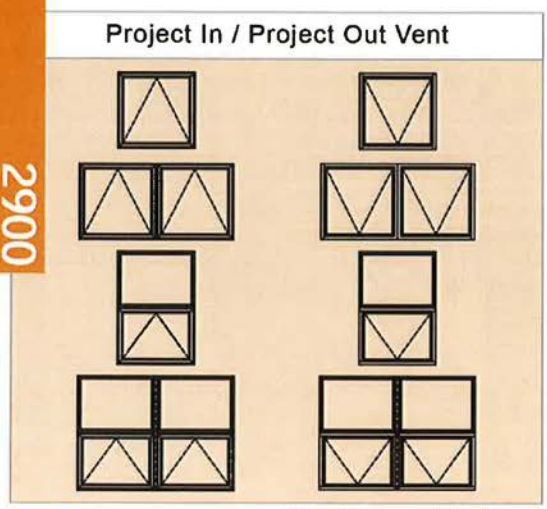

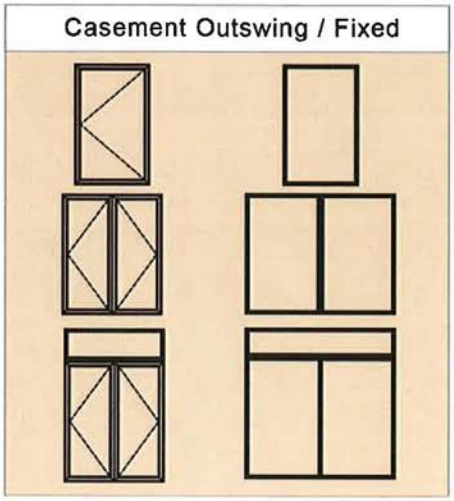

Please visit: www.mankowindows.com for DWG and PDF detail cuts

AAMA PERFORMANCE RESULTS

	AAMA/ NWWDA 101/ I.S.2-97 Rating	Air Infiltration	Minimum Water Resistance	Uniform Structural Load	Forced Entry Resistance
Project In	AP-AW80	.1 CFM	12 PSF	120 PSF	Level 10
Project Out	AP-AW80	.1 CFM	12 PSF	120 PSF	Level 10
Casement	AP-AW80	.1 CFM	12 PSF	120 PSF	Level 10
Fixed	F-AW100	.1 CFM	12 PSF	150 PSF	N/A

▲ Minimum Gateway performance values listed. All testing met or exceeded listed values. Consult factory for actual test results obtained and certified test reports.

▲ Windows can be inside or outside glazed (inside glazing is strongly recommended unless absolutely necessary) with an extruded aluminum snap-in glazing bead.

2900 SERIES HARDWARE OPTIONS

	4 Bar Hinge	Butt Hinge	Friction Adjuster	Key Release Limit Arm	Single Arm Roto Operator	Dual Arm Roto Operator	Cam Handle	Pole Ring Cam	Access Controlled Lock	Lift Lock	Glazing Options
Project In	S		O	O			S	O	O		1"
Project Out	S		O	O		O*	S	O	O	O*	1"
Casement Outswing Butt Hinges		S	O	O	S*		O		O	S	1"
Casement Outswing 4-Bar Hinge	S		O	O			S		O		1"
Casement Inswing Butt Hinges		S	S	O			S		O		1"
Casement Inswing 4-Bar Hinges	S		O	O			S		O		1"

* = size limitations apply S = Standard Hardware O = Optional Hardware

▲ Locking cam handles, access controlled locks, and keepers are of cast white bronze with US26D finish. Four-bar hinges are fabricated of stainless steel, meeting AAMA 904.1 requirements. Butt hinges are made of extruded aluminum 6063-T6 alloy with stainless steel pins.

Feb 2009

COLOR:
MEDIUM BRONZE

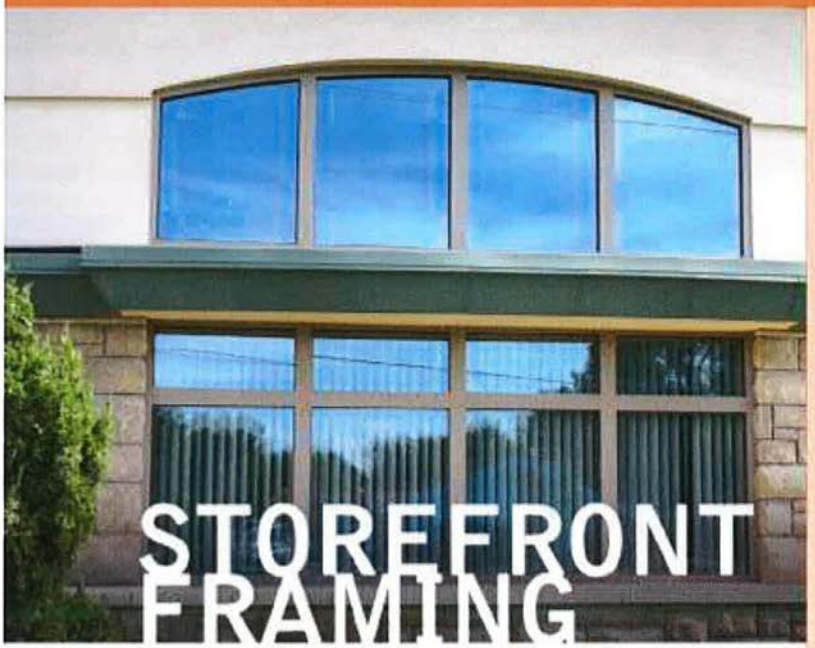

ALUMINUM FLUSH GLAZED STOREFRONT

450 series 13/4" x 4 1/2" Non Thermal I 1450 series 2" x 4 1/2" Non Thermal
2450 series 2" x 41/2" Center Glazed Thermal I 2450 FS series 2" x 4 1/2" Front Glazed Thermal
2650 series 2" x 6 1/2" Offset Glazed Thermal I 5450i series 2 1/4" x 4 1/2" Center Glazed Isobar

Manko's flush glazed storefront systems can accommodate a wide variety of design applications including entrance door framing, entrance sidelites, horizontal punched opening, and mullions for ribbon windows. Need ventilation? No problem. Insert an 800 or 1100 series projected vent. Flush glazed storefronts are part of a lineal program designed for installers to fabricate their own openings to reduce lead times and meet construction schedules. These systems are dry glazed and internally weeped. If you are designing a low cost framing system that requires a fast installation schedule, then storefront framing will answer the call.

Storefront Framing

FEATURES

- Structurally tested per ANSI/AAMA 101
- 1 3/4 " to 2 1/4 " sightlines
- 4 1/2" and 6 1/2" frame depths
- Screw spline construction
- EPDM gaskets provide dry glazing
- 6063-T5 or 6063-T6 aluminum alloy
- .078" wall thickness
- Integral framing accommodates storefront doors installed in system
- Optional 90 corner mullions
- Window vent options provide ventilation
- 1/4" to 1 1/8" glazing infills
- Sill starter and head receptor options
- Vertical expansion joint mullions
- "Azo-braided" thermal barrier
- Full range of anodized finishes
- Full range of architectural painted finishes
- Spandrel and composite glazing panels
- Dual glazing integral blinds
- Inside or outside glazing
- Multi-plane glazing
- Pivoting mullions

800 Haven Drive
Manhattan, KS 66502
Phone: (800) 642 1488
Fax: (800) 376 2616

MANKO WINDOW SYSTEMS INC.

11900 East 51st Ave., Suite A
Denver, CO 80239
Phone: (888) 642 1488
Fax: (303) 375 0969

Please visit:
www.mankowindows.com
for more information

COLOR:
MEDIUM BRONZE

Storefront Framing

Standard Elevations

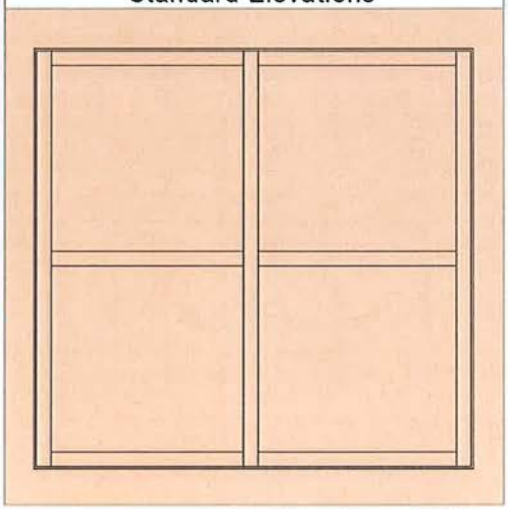

Windows

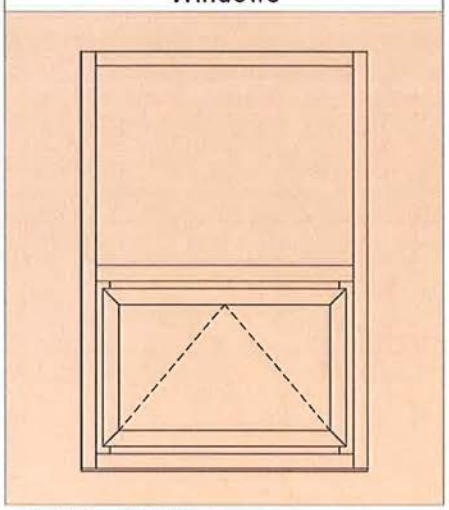

Please visit: www.mankowindows.com for DWG and PDF detail cuts

AAMA PERFORMANCE RESULTS

	Air Infiltration	Minimum Water Resistance	Uniform Structural Load	CRF
450 Series	N/T	N/T	N/T	N/T
1450 Series	.06 CFM	12 PSF*	60 PSF	N/T
2450 Series	.06 CFM	12 PSF*	60 PSF	61
2450FS Series	.06 CFM	12 PSF*	60 PSF	61
2650 Series	.06 CFM	12 PSF*	60 PSF	62
5450I Series	.06 CFM	12 PSF*	60 PSF	63
Window Vents				
800 Series	.1 CFM	12 PSF	120 PSF	57
1100 Series	.1 CFM	10 PSF	120 PSF	52

* = high performance subsill N/T = Not Tested

Minimum Gateway performance values listed. All testing met or exceeded listed values. Consult factory for actual test results obtained and certified test reports.

GLAZING OPTIONS

	1/4"	3/8"	1"	1 1/8"
450 Series	S	O		
1450 Series	O	O	S	O*
2450 Series	O	O	S	O*
2450FS Series	O	O	S	O*
2650 Series	O	O	S	O*
5450I Series	O	O	S	O*

S = Standard hardware O = Optional hardware

* = Glazing options include hermetically sealed integral blinds, swing sash blinds and take out sash blinds

WINDOW HARDWARE

	4 Bar Hinge	Butt Hinge	Friction Adjuster	Key Release Limit Arm	Single Arm Roto Operator	Cam Handle	Pole Ring Cam	Access Controlled Lock	Lift Lock
800 PO / PI Vent	S		O	O		S	O	O	
800 Casement		S	O	O	S	O		O	S
1100 PO Vent	S		O	O	S*	S	O	O	
1100 Casement		S	O	O	S*	O		O	S

* = size limitations apply S = Standard hardware O = Optional hardware

Locking cam handles, access controlled locks, and keepers are of cast white bronze with US26D finish. Four-bar hinges are fabricated of stainless steel, meeting AAMA 904.1 requirements. Butt hinges are made of extruded aluminum 6063-T5 or 6063-T6 alloy with stainless steel pins.

COLOR:
MEDIUM BRONZE

STANDARD ENTRANCES
DOOR TYPE / SECTION DIMENSION

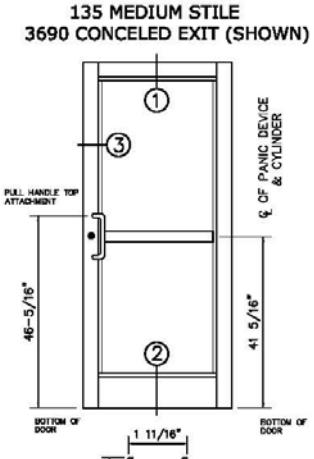

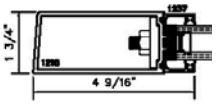

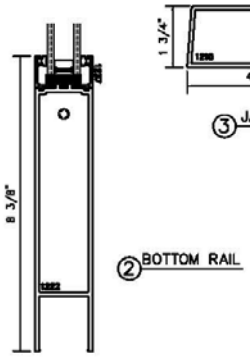

STANDARD MEETING RAILS
135 MEDIUM STILE

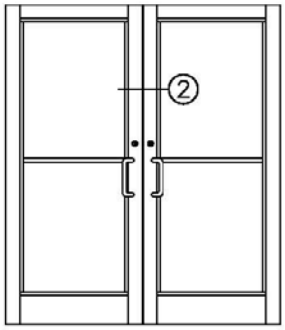

ALUMINUM STOREFRONT SWING DOORS

100 series 2 1/4" Narrow Stile | 135 series 3 11/16" Medium Stile | 150 series 5" Wide Stile
135H series 3 11/16" Medium Stile Heavy Wall | 150H series 5" Wide Stile Heavy Wall
135i series 3 11/16" Medium Stile Isobar | 150i series 5" Wide Stile Isobar

Manko's aluminum storefront entrance doors are designed for offices, schools, retail shops, municipalities, churches or any other commercial buildings. These doors are offered in narrow stile, medium stile, and wide stile configurations. When combined with optional rails and intermediates (horizontal and/or vertical), these door systems are flexible enough to meet most design and hardware requirements. The availability of multiple glazing stops allow for the use of a broad range of glazing products. These storefront doors utilize a telescoping mortise and tenon joint coupled with a horizontal shear block. These joints are then further reinforced with a 3/8" steel tie rod and sleeve. This tripled redundancy ensures structural integrity and long term durability. Welded corner construction is also available upon request. Anti Terrorist Force Protection (ATFP) certification can be obtained using these systems (consult factory for details).

FEATURES

Storefront Doors

- Structurally tested per ANSI/AAMA 101
- 3-way corner construction (welded upon request)
- Horizontal and vertical midrail options
- 3/16" to 1" glazing infills
- 6063-T5 or 6063-T6 aluminum alloy
- .125 or .187 wall thickness
- 1 3/4" or 2" face dimensions
- Adjustable glass setting blocks
- Double adjustable astragals with poly-pile weathering on pairs
- Standard 1" round offset push-pulls
- Offset pivots, butt hinges, center pivots or continuous geared hinges options
- Maximum security dead bolts, concealed rod panic, or rim panic exit devices
- Doors will accomodate most hardware types
- Full range of anodized finishes
- Full range of architectural painted finishes
- Spandrel and composite glazing panels
- Integral structural thermal barrier on 135i and 150i series

800 Hayes Drive
Manhattan, KS 66502
Phone: (800) 642.1488
Fax: (800) 576.2656

MANKO WINDOW SYSTEMS INC.

11000 East 51st Ave., Suite B
Denver, CO 80239
Phone: (888) 642.1488
Fax: (303) 375.0669

Please visit:
www.mankowindows.com
for more information

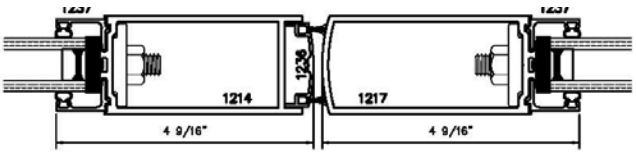

2 MEETING RAIL

COLOR:
MEDIUM BRONZE

Storefront Doors

100 Narrow Stile Series

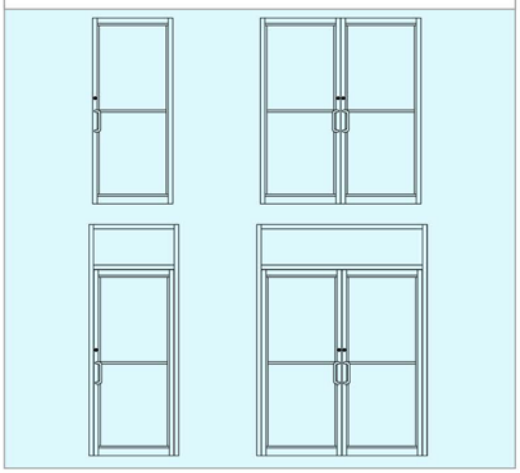

135 Medium Stile Series

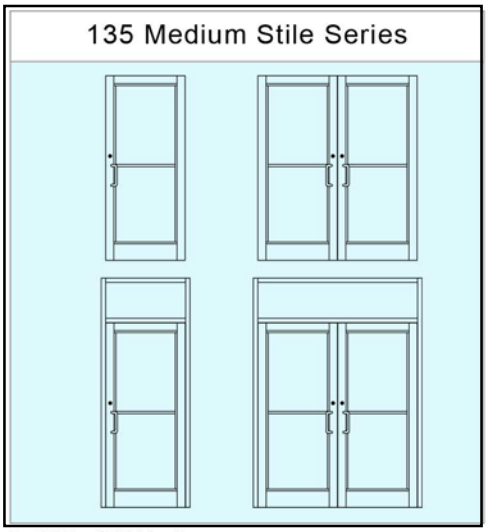

Please visit: **www.mankowindows.com** for DWG and PDF detail cuts

AAMA PERFORMANCE RESULTS

	Air Infiltration	Minimum Water Resistance	Uniform Structural Load	CRF
100 series*	.50 CFM	N/A	45 PSF	N/A
135 series*	.50 CFM	N/A	60 PSF	N/A
150 series*	.50 CFM	N/A	60 PSF	N/A
135H series	.50 CFM	N/A	60 PSF	N/A
150H series	.50 CFM	N/A	60 PSF	N/A
135i series	.50 CFM	N/A	60 PSF	N/A
150i series	.50 CFM	N/A	60 PSF	N/A

N/A = Not applicable

▲ Minimum Gateway performance values listed. All testing met or exceeded listed values. Consult factory for actual test results obtained and certified test reports.

* Single door leaf

150 Wide Stile Series

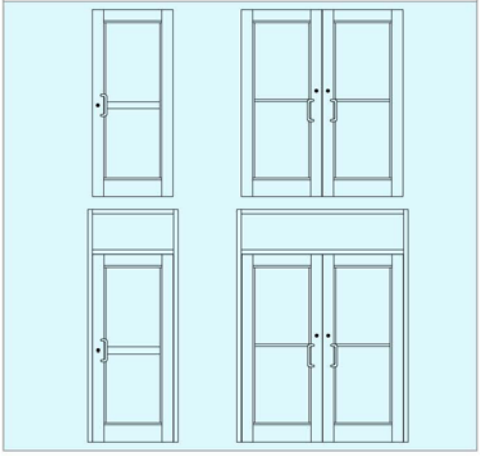

DOOR HARDWARE & GLAZING OPTIONS

	Maximun Security Locking	Concealed Panic Exits	Rim Panic Exits	Vertical Mid Rails	Horizontal Mid Rails	Option 10" Bottom Rail	1/4" Glazing	1" Glazing
100 series	Yes	Yes	Yes	Yes	Yes	Yes	Yes	Yes
135 series	Yes	Yes	Yes	Yes	Yes	Yes	Yes	Yes
150 series	Yes	Yes	Yes	Yes	Yes	Yes	Yes	Yes

▲ Hinging can be offset pivots, butt hinges, continuous hinges or center pivots. Push / pulls are a 1" round offset pull handle and push bars.

Feb 2009

Fabricators & Glaziers

Guardian Select® Fabricators SunGuard Advanced Architectural Glass products are produced at multiple U.S. locations and are distributed through a network of independent Guardian Select Fabricators (shown above). These fabricators have completed a rigorous certification process administered by Guardian. Select Fabricators offer comprehensive glass fabrication for commercial projects and typically are able to cut, heat-treat, insulate, laminate, silkscreen and produce spandrel glass. In addition, some Select Fabricators can bend SunGuard coated glass for more complex designs. Select Fabricators provide glass samples for mock-ups and typically offer fast-track delivery.

Glazier Connection™ Members Guardian's Glazier Connection quickly puts you in touch with glazing contractors that are experienced in installing Guardian high performance coated glass for commercial applications, including all types of facades, curtainwalls, windowwalls, punched openings and commercial windows, spandrel glass, storefronts, and much more. Guardian Glazier Connection members work seamlessly with our Guardian Select Fabricator network of glass fabrication companies to provide you with quick turnaround and expertise, so your project can be completed on time.

To locate a Guardian Select Fabricator or Glazier Connection member near your project site, visit www.SunGuardGlass.com.

Guardian Glass
INNOVATION AND TECHNICAL SUPPORT

USGBC LEED Certification Using SunGuard SuperNeutral, SunGuard High Performance and SunGuard Solar Series glass products can be an important part of obtaining LEED certification in five credit categories: Energy and Atmosphere, Materials and Resources, Indoor Environmental Quality, Innovation and Design Process, and Regional Priority. For a copy of our LEED Brochure, call 1-866-GuardSG (482-7374) or visit www.SunGuardGlass.com.

Web Resources at www.SunGuardGlass.com Guardian provides several easy-to-use online tools and resources to help architects specify SunGuard products on our web site at www.SunGuardGlass.com, including: Glass Analytics, a comprehensive suite of tools comprised of a Performance Calculator, BIM Generator, Building Energy Calculator and Glass Visualizer that offers architects and other project specifiers comprehensive tools to evaluate commercial glazing options and their impact on energy use and design; a smartphone app that allows interaction with hundreds of projects worldwide; a searchable commercial building project database; a SunGuard performance comparison tool; a Guardian Select Fabricator locator and a Glazier Connection member locator.

3-Part Specifications Guardian's SunGuard specifications in standard CSI 3-part format are available from your Guardian Architectural Design Manager (ADM) and at www.SunGuardGlass.com. ARCOM, the exclusive publisher of AIA (the American Institute of Architects) MASTERSPEC®, has authorized Guardian to offer a licensed version of PRODUCT MASTERSPEC on the SunGuard Web site and, for AIA members, on the AIA web site. In addition, you can find SunGuard specifications online at BSD SpecLink and ARCAT.

AIA/CES Presentations Guardian Glass participates in the American Institute of Architects Continuing Education System (AIA/CES) by providing seminar presentations, some of which qualify for Health, Safety and Welfare credits. Whether you are interested in basic commercial glass knowledge, glass from an energy conservation perspective or current applications for laminated glass, we can provide you with helpful information regarding design using glass. Call 1-866-GuardSG (482-7374) or your local SunGuard Architectural Design Manager to arrange a time and place for a seminar presentation. In addition, a number of these presentations can be accessed on the McGraw-Hill Construction Continuing Education Center online.

Technical Support Hotline: 1-866-GuardSG (482-7374)

Technical support is always available from your Architectural Design Manager (ADM) and/or Regional Technical Advisor (RTA). For technical or product information, please call our Technical Support Hotline to find the technical specialist in your area. Some areas where we can help are:

- solar, thermal or acoustical performance of coated glass
- computer-based wind load and thermal stress analysis program
- product availability and specification information
- architectural glass sample boxes and 12" x 12" samples

SUNGUARD®
Advanced Architectural Glass

Performance Data – SuperNeutral

Exterior Interior

Product	Outboard - Inboard Substrate	Appearance	Transmittance Visible Light %	Transmittance Ultra Violet %	Transmittance Solar Energy %	Reflectance Visible Light %	Reflectance Ultra Violet %	Reflectance Solar Energy %	U-Value Winter Nighttime Btu/hr·ft²·°F	U-Value Winter Nighttime Btu/hr·ft²·°F	Relative Heat Gain	Solar Heat Gain Coefficient	Light to Solar Gain (LSG)
SunGuard SuperNeutral			Coating #2 Surface								6 mm/12.7 mm a.a./6 mm		
SNX 62/27	UltraClear - UltraClear	Ultra Clear	64	8	24	11	13	51	0.29	0.24	65	0.27	2.40
	Clear - Clear	Clear	62	6	23	11	12	39	0.29	0.24	65	0.27	2.31
	Green - Clear	Green	52	3	18	9	12	10	0.29	0.24	59	0.24	2.13
	TwilightGreen - Clear	Dark Green	46	2	16	8	11	8	0.29	0.24	54	0.22	2.08
	CrystalGray - Clear	Light Gray	44	3	16	8	11	19	0.29	0.24	54	0.22	1.98
	Gray - Clear	Gray	31	3	12	6	11	19	0.29	0.24	45	0.18	1.71
	CrystalBlue - Clear	Blue	40	4	15	7	11	25	0.29	0.24	51	0.21	1.91
SNX 51/23	UltraClear - UltraClear	Light Blue	53	14	20	14	14	46	0.29	0.24	57	0.23	2.28
	Clear - Clear	Light Blue	51	11	19	14	14	36	0.29	0.24	57	0.23	2.19
	Green - Clear	Blue-Green	43	5	15	11	13	10	0.29	0.24	52	0.22	1.99
	TwilightGreen - Clear	Dark Green	38	3	13	10	13	8	0.29	0.24	49	0.20	1.93
	CrystalGray - Clear	Light Gray	36	6	14	9	13	18	0.29	0.24	48	0.20	1.85
	Gray - Clear	Gray	26	5	10	7	13	17	0.29	0.24	41	0.16	1.57
	CrystalBlue - Clear	Blue	33	7	13	9	13	23	0.29	0.24	46	0.19	1.78
SN 68	UltraClear - UltraClear	Ultra Clear	71	40	37	11	13	43	0.29	0.25	94	0.39	1.80
	Clear - Clear	Clear	68	30	33	11	12	33	0.29	0.25	90	0.38	1.80
	Green - Clear	Green	57	13	23	9	12	9	0.29	0.25	72	0.30	1.92
	TwilightGreen - Clear	Dark Green	51	9	20	8	11	7	0.29	0.25	64	0.27	1.93
	CrystalGray - Clear	Light Gray	48	17	23	8	11	16	0.29	0.25	71	0.30	1.64
	Gray - Clear	Gray	34	13	18	6	11	16	0.29	0.25	61	0.25	1.37
	CrystalBlue - Clear	Blue	44	19	23	7	11	21	0.29	0.25	70	0.29	1.51
SN 54	UltraClear - UltraClear	Ultra Clear	56	22	26	13	19	44	0.29	0.24	69	0.29	1.96
	Clear - Clear	Clear	54	16	24	13	18	35	0.29	0.24	68	0.28	1.92
	Green - Clear	Green	45	7	17	11	18	10	0.29	0.24	58	0.24	1.89
	TwilightGreen - Clear	Dark Green	41	4	15	10	18	8	0.29	0.24	53	0.22	1.86
	CrystalGray - Clear	Light Gray	38	9	17	9	18	17	0.29	0.24	56	0.23	1.67
	Gray - Clear	Gray	27	7	13	7	17	16	0.29	0.24	48	0.19	1.40
	CrystalBlue - Clear	Blue	35	10	16	8	17	22	0.29	0.24	54	0.22	1.57
SNR 43	UltraClear - UltraClear	Light Silver	45	24	21	28	14	54	0.29	0.24	56	0.23	1.96
	Clear - Clear	Light Silver	43	17	19	28	14	43	0.29	0.24	56	0.23	1.89
	Green - Clear	Green	36	8	14	21	14	14	0.29	0.24	50	0.20	1.78
	TwilightGreen - Clear	Dark Green	32	5	12	18	14	11	0.29	0.24	46	0.19	1.73
	CrystalGray - Clear	Silver Gray	31	9	13	16	14	21	0.29	0.24	47	0.19	1.59
	Gray - Clear	Silver Gray	22	8	10	10	13	19	0.29	0.24	41	0.17	1.31
	CrystalBlue - Clear	Silver Blue	28	11	13	14	13	26	0.29	0.24	46	0.19	1.50

NOTES RELATED TO ALL SUNGUARD PERFORMANCE TABLES

- The performance values shown are nominal and subject to variations due to manufacturing tolerances.
- All coatings are on the #2 surface unless noted otherwise.
- Guardian performance data are calculated for center-of-glass only (no spacer or framing) in accordance with the LBNL Window 7 program.
- Relative Heat Gain, Shading Coefficient, Solar Heat Gain Coefficient and/or LSG may change slightly when using argon gas fill.
- Glass may require heat strengthening or tempering to resist potential thermal stresses. SNR 43 must be heat treated.
- A slight shift in visible light reflectance or transmission may be noticed after heat treatment.
- Guardian recommends edge deletion for all commercial low-E coatings.
- Guardian reserves the right to change product performance characteristics without notice or obligation.

SUNGUARD®
Advanced Architectural Glass

Performance Data – High Performance & Solar

Exterior Interior

Product	Outboard - Inboard Substrate	Appearance	Transmittance Visible Light %	Transmittance Ultra Violet %	Transmittance Solar Energy %	Reflectance Visible Light %	Reflectance Ultra Violet %	Reflectance Solar Energy %	U-Value Winter Nighttime Btu/hr·ft²·°F	U-Value Winter Nighttime Btu/hr·ft²·°F	Relative Heat Gain	Solar Heat Gain Coefficient	Light to Solar Gain (LSG)
SunGuard High Performance			Coating #2 Surface - except where noted (#3)								6 mm/12.7 mm a.a./6 mm		
Neutral 78/65 (#3)	UltraClear - UltraClear	Ultra Clear	81	54	66	13	13	23	0.31	0.27	171	0.72	1.12
	Clear - Clear	Clear	78	39	55	13	13	19	0.31	0.27	156	0.66	1.18
Neutral 78/65	UltraClear - UltraClear	Ultra Clear	81	54	66	13	13	22	0.31	0.27	160	0.68	1.19
	Clear - Clear	Clear	78	39	55	13	13	18	0.31	0.27	147	0.62	1.26
Neutral 61	Clear - Clear	Neutral Pewter	60	31	37	21	14	29	0.30	0.26	101	0.42	1.42
	Green - Clear	Green	50	13	23	16	13	11	0.30	0.26	72	0.30	1.69
Neutral 50	Clear - Clear	Neutral Blue	50	31	32	16	11	20	0.33	0.29	95	0.39	1.27
	Green - Clear	Green	42	13	20	13	10	9	0.33	0.29	68	0.28	1.50
Neutral 40	Clear - Clear	Neutral Gray	40	27	25	21	12	23	0.33	0.29	78	0.32	1.25
	Green - Clear	Green	34	11	16	16	12	10	0.33	0.29	59	0.24	1.40
AG 50	UltraClear - UltraClear	Light Silver	52	43	33	28	19	41	0.30	0.25	86	0.36	1.45
	Clear - Clear	Light Silver	50	30	29	27	19	34	0.30	0.25	82	0.34	1.48
	Green - Clear	Green	42	12	18	21	18	13	0.30	0.25	61	0.25	1.66
	CrystalGray - Clear	Silver Gray	35	16	20	16	18	18	0.30	0.25	64	0.26	1.34
	Gray - Clear	Silver Gray	25	12	16	10	18	16	0.30	0.25	57	0.23	1.08
	CrystalBlue - Clear	Silver Blue	32	17	20	14	18	21	0.30	0.25	65	0.27	1.20
AG 43	UltraClear - UltraClear	Light Silver	45	38	30	30	15	40	0.30	0.26	80	0.33	1.34
	Clear - Clear	Light Silver	43	26	26	30	15	33	0.30	0.26	76	0.31	1.37
	Green - Clear	Green	36	11	16	22	15	13	0.30	0.26	57	0.23	1.55
	CrystalGray - Clear	Silver Gray	30	14	18	17	14	18	0.30	0.26	60	0.25	1.23
	Gray - Clear	Silver Gray	21	11	15	11	14	15	0.30	0.26	54	0.22	0.98
	CrystalBlue - Clear	Silver Blue	28	15	18	15	14	20	0.30	0.26	61	0.25	1.10
SunGuard Solar													
Silver 20	Clear - Clear	Silver	18	16	14	30	30	26	0.37	0.33	56	0.22	0.81
	Green - Clear	Silver Green	15	7	8	23	30	12	0.37	0.33	46	0.18	0.83
Other Guardian Low-E Products													
Neutral 70	Clear - Clear	Clear	73	45	49	12	12	17	0.32	0.28	132	0.55	1.31
Neutral 70 (#3)	Clear - Clear	Clear	72	45	49	12	12	20	0.32	0.28	152	0.64	1.14

Performance Data with SunGuard IS 20

Exterior Interior

Product	Outboard - Inboard Substrate	Appearance	Transmittance Visible Light %	Transmittance Ultra Violet %	Transmittance Solar Energy %	Reflectance Visible Light %	Reflectance Ultra Violet %	Reflectance Solar Energy %	U-Value Winter Nighttime Btu/hr·ft²·°F	U-Value Winter Nighttime Btu/hr·ft²·°F	Relative Heat Gain	Solar Heat Gain Coefficient	Light to Solar Gain (LSG)
SunGuard SuperNeutral + IS 20			Coating #3 & IS 20 #4 Surface								6 mm/12.7 mm a.a./6 mm		
SNX 62/27 + IS 20	UltraClear - UltraClear	Ultra Clear	62	8	24	12	13	51	0.23	0.20	62	0.26	2.41
	Clear - Clear	Clear	60	6	22	12	13	40	0.23	0.20	62	0.26	2.33
SNX 51/23 + IS 20	UltraClear - UltraClear	Light Blue	51	13	20	14	14	46	0.23	0.20	54	0.22	2.31
	Clear - Clear	Light Blue	50	10	18	14	14	36	0.23	0.20	54	0.22	2.23
SN 68 + IS 20	UltraClear - UltraClear	Ultra Clear	69	37	36	12	13	43	0.24	0.20	91	0.38	1.80
	Clear - Clear	Clear	66	29	32	12	13	33	0.24	0.20	87	0.36	1.82
SN 54 + IS 20	UltraClear - UltraClear	Ultra Clear	54	20	25	14	19	44	0.24	0.20	67	0.28	1.97
	Clear - Clear	Clear	52	15	23	14	19	35	0.24	0.20	65	0.27	1.94
SNR 43 + IS 20	UltraClear - UltraClear	Light Silver	43	22	20	29	15	54	0.23	0.20	54	0.22	1.97
	Clear - Clear	Light Silver	42	17	18	28	15	43	0.23	0.20	53	0.22	1.92

NOTES SPECIFIC TO THE SUNGUARD SUPERNEUTRAL with 20 TABLE ABOVE:

GUARDIAN SUNGUARD
ADVANCED ARCHITECTURAL GLASS

SHEET METAL SUN VISORS, EYE BROWS
AND METAL WALL SHINGLES (PRODUCT)
FLAT LOCK PANEL SYSTEM

PURE+FREEFORM

HOME | BRAND 3 | PROJECTS 3 | PRODUCTS | FINISHES |

MEDIA | CONTACT

U

HOME | BRAND 3 | PROJECTS 3 | PRODUCTS | FINISHES |

MEDIA | CONTACT

U

metal shingle product

PURE+FREEFORM

Architectural Metal Walls & Ceilings

© 2016 Pure + FreeForm | All rights reserved.

CORPORATE

Q 8530 Eagle Point Blvd, Ste 10(

, info@purefree

x Monday - Friday 8:00

V 612.208

SHEET METAL SUN VISORS, EYE BROWS AND METAL WALL SHINGLES (COLOR) PURE + FREEFORM

ARCHITECTURAL SCREEN
ADJACENT PARKING / DRIVE AISLE

COLOR:
MEDIUM BRONZE

877.884.4653 *Inspired to Serve!*

HOME | WEBSITE FEEDBACK | MY ACCOUNT

Web Code | Search

McNICHOLS
Industrial & Architectural Hole Product Solutions since 1952

PRODUCTS | DESIGNER | SERVICES | LOCATIONS | RESOURCES | GALLERY | CONTACT US | CAREERS | CATALOGS

You Are Here: Home > Perforated > Decorative > Item Detail

LOGIN | My Cart (0)

You have Selected:

Perforated
Decorative [Remove]

Continue Narrowing By:

Class
Designer (44)

Major Material
Aluminum (16)
Plain Steel (29)

Minor Material
Cold Rolled (29)
Type 3003-H14 (14)
Type 5052-H32 (2)

Gauge (Thickness)
.032 (6)
.040 (7)
.063 (3)
11 (1)
16 (2)
20 (19)
22 (6)
24 (1)

Pattern Name
Classic (2)
Gothic (2)
Majestic 1" - 40% (5)
Airline (6)
Full Cloverleaf (5)
> See more...

Surface Finish
Mill (45)

Percent Open Area
35 (6)
36 (4)
39 (2)
40 (7)
45 (6)
> See more...

Width
36.0000 (41)
48.0000 (4)

Length (Span for Grating)
24.0000 (17)
40.0000 (1)
48.0000 (3)
96.0000 (15)
120.0000 (9)

SKU Type
Each (21)
Sheet (24)

McNICHOLS Quality Decorative Perforated, 20 Gauge Plain Steel, Hanover Square, 48.0000" x 120.0000"

CLICK HERE FOR LIVE ASSISTANCE

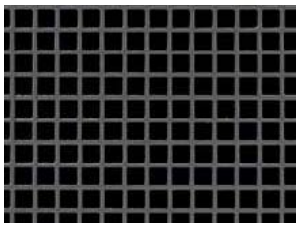

Print Item Specifications
Email Item Specifications

Item	Description
1695142041	McNICHOLS® Quality Perforated Metal, Designer, Plain Steel Cold Rolled, 20 Gauge, Hanover Square Pattern, 64 % Open Area, Sheet , 48.0000" Width X 120.0000" Length

Quantity	Price	SKU
1 - 7	$263.20	Sheet
8 - 15	$238.00	Sheet
16 - 22	$192.40	Sheet
23 +	Request Quote	

Quantity : 1

ADD TO CART

Click here to cut this item to size

Item Specs | Drawings | Load Tables | Accessories | Options | Applications | Packaging

Characteristics for this product are listed below.

HS Item Number	1695142041
Product Line :	Perforated
Product Type :	Decorative
Weight :	0.54 #/SF
Class :	Designer
Trade Name :	McNICHOLS®
Major Material :	Plain Steel
Minor Material :	Cold Rolled
Gauge (Thickness) :	20
Pattern Name :	Hanover Square
Surface Finish :	Mill
Percent Open Area :	64
Width :	48.0000
Length (Span for Grating) :	120.0000
SKU Type :	Sheet
Margins Parallel to Length :	Min Safe Both Sides
End Pattern :	None
Margins Parallel to Width :	Sheared Through

About Us | ISO Certification | Glossary | McNichols In a Minute | Site Map | Facebook

Inspired to Serve! Quality Hole Products and Services by McNICHOLS

©2010 McNICHOLS CO.
The Hole Story and McNICHOLS are registered trademarks of McNICHOLS CO. All rights reserved.
No part of this website may be reproduced in any form without permission.

SW 7504
Keystone Gray
Interior / Exterior
Locator Number: 243-C4

CEMENT BOARD SIDING WITH REVEALS SHERWIN WILLIAMS: KEYSTONE GRAY SW7504

Hardie® Reveal® Panel System

Embody a modern aesthetic

Get the look you are after with the solution that offers design flexibility. The Hardie® Reveal® Panel system can be utilized to create an effective modern, durable, panelized look.

A system of components specifically developed for multi-family and light commercial construction. If your project calls for a panelized look — the Hardie Reveal Panel system offers the design flexibility you need.

Beginning with a commercial grade panel developed for multi-family and light commercial applications, the Hardie Reveal Panel system is a complete solution for creating a panelized look. Eliminate the guesswork in creating this look with the Hardie Reveal Panel system, with all parts including panels and trims supplied by James Hardie. Check for availability and call us to request a James Hardie Preferred Installer when specifying the Hardie Reveal Panel system.

For details about technical information and specs, visit JamesHardieCommercial.com

SW 7504
Keystone Gray
Interior / Exterior
Locator Number: 243-C4

CEMENT BOARD SIDING WITH REVEALS SHERWIN WILLIAMS: KEYSTONE GRAY SW7504

JamesHardie Commercial

JamesHardieCommercial.com

Hardie® Reveal® Panel System

Design Freedom

- Horizontal or vertical application
- 7/16" thick, commercial grade panels
- Cleaner look with fewer fasteners (approximately 14-21 per 4' x 8' panel)
- Standard panel size is nominal 4' x 8' and can be cut on-site to desired size
- Panels available with ColorPlus® Technology
- Panels can be cut on-site to desired size

Unique Aesthetic

- Sharp express joint look with deep shadow lines
- Smooth panel look with exposed fasteners
- Trims and fasteners can be field painted or left with a metal finish
- Off-stud jointing solution provides design flexibility

Proven James Hardie Durability

- Engineered for Climate® to stand up to the demands of your project's specific climate
- Commercial panel developed specifically for use in multi-family, mixed use, senior living and light commercial facilities
- Ventilated rain screen assembly incorporates best practices for moisture management
- Proven performance with James Hardie fiber cement panels coupled with durable aluminum trims

Embody a modern aesthetic

Get the look you are after with the solution that offers design flexibility. The Hardie® Reveal® Panel system can be utilized to create an effective modern, durable, panelized look.

A system of components specifically developed for multi-family and light commercial construction. If your project calls for a panelized look — the Hardie Reveal Panel system offers the design flexibility you need.

Beginning with a commercial grade panel developed for multi-family and light commercial applications, the Hardie Reveal Panel system is a complete solution for creating a panelized look. Eliminate the guesswork in creating this look with the Hardie Reveal Panel system, with all parts including panels and trims supplied by James Hardie. Check for availability and call us to request a James Hardie Preferred Installer when specifying the Hardie Reveal Panel system.

For details about technical information and specs, visit JamesHardieCommercial.com

CEDAR CANOPY
(CLEAR SEALED)

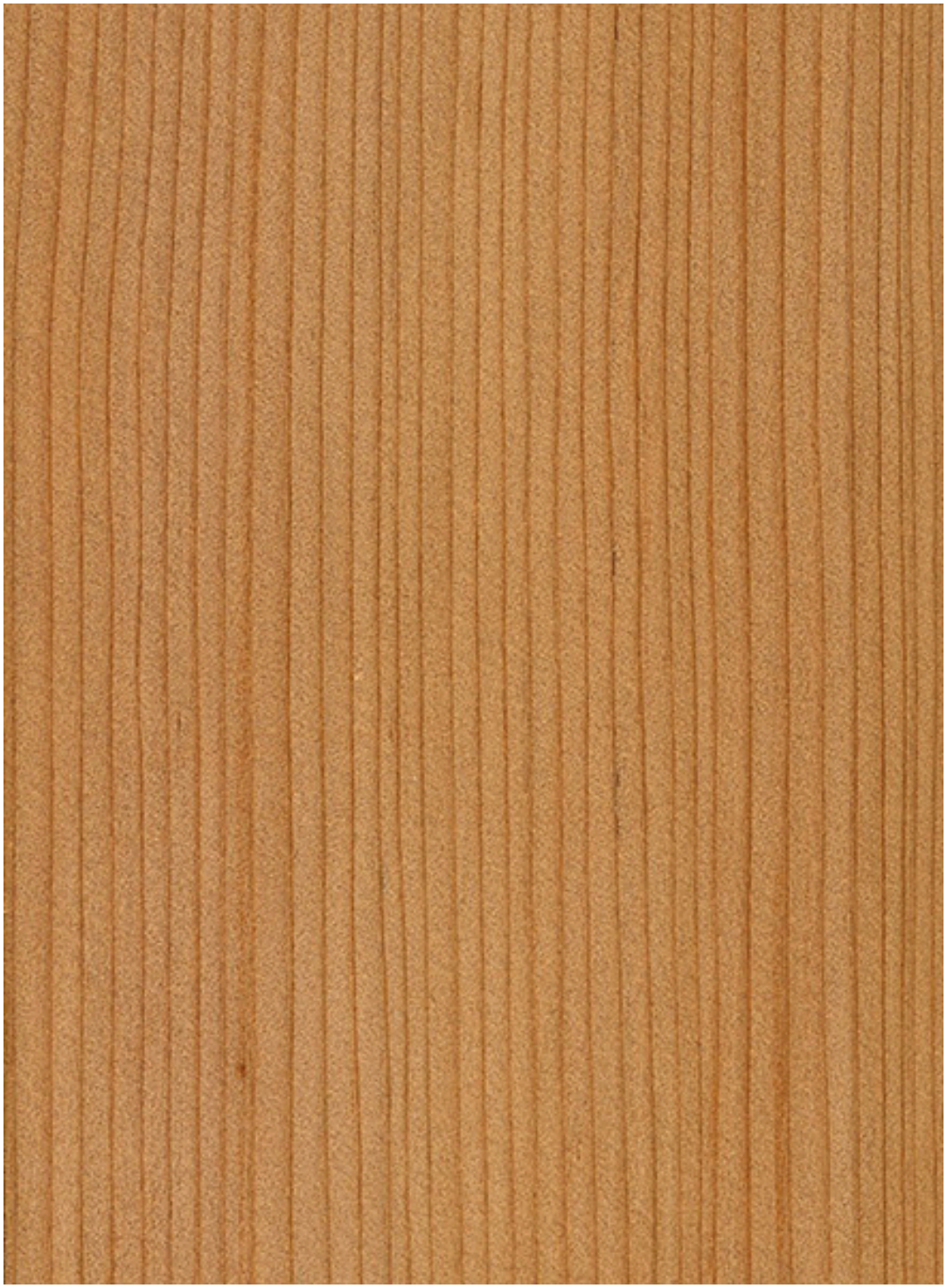

NOMINAL DIMENSIONS (SECURITY CORE)

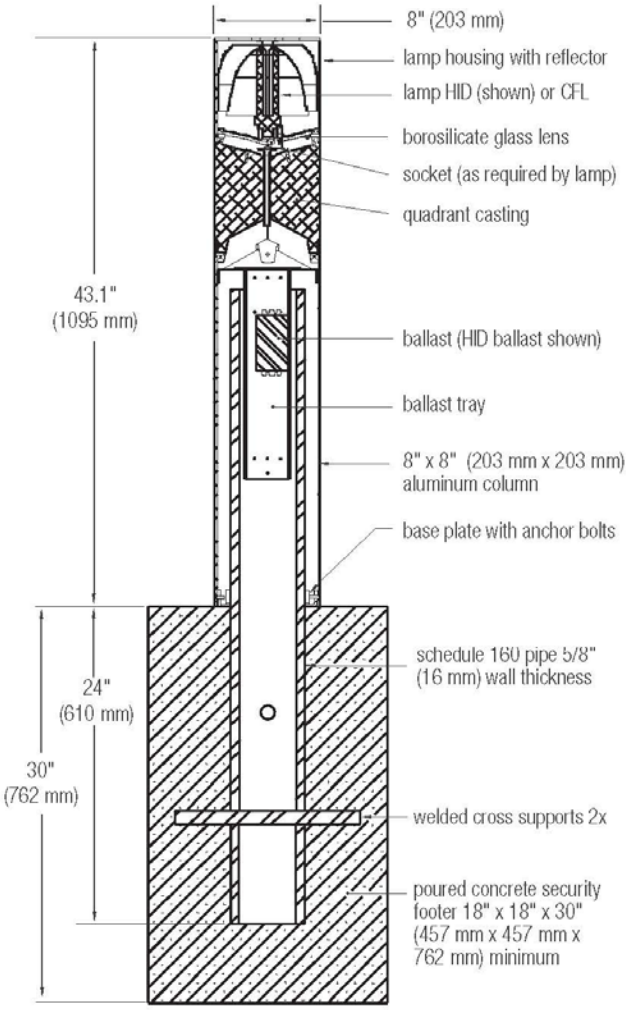

BASE PLATE MOUNTING DETAIL

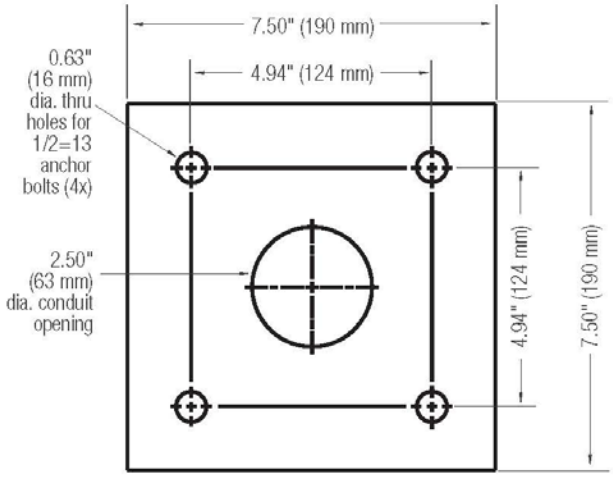

T 800.451.0410 | www.forms-surfaces.com

FORMS+SURFACES®

© 2015 Forms+Surfaces® | All dimensions are nominal. Specifications and pricing subject to change without notice. For the most current version of this document, please refer to our website at www.forms-surfaces.com.

BEGA

Photometric Filename: 55921.IES

TEST:	N/A
TEST LAB:	BEGA
DATE:	07/28/2014
LUMINAIRE:	55 921
LAMP:	4.2W LED

All results in accordance with IESNA LM-63-1995

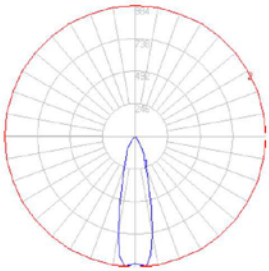

Characteristics

Lumens Per Lamp	N.A. (absolute)
Total Lamp Lumens	N.A. (absolute)
Luminaire Lumens	314
Total Luminaire Efficiency	N.A.
Luminaire Efficacy Rating (LER)	52
Total Luminaire Watts	6
Ballast Factor	1.00
CIE Type	Direct
Spacing Criterion (0-180)	0.48
Spacing Criterion (90-270)	0.48
Spacing Criterion (Diagonal)	0.48
Basic Luminous Shape	Circular
Luminous Length (0-180)	0.00 m
Luminous Width (90-270)	0.05 m (Diameter)
Luminous Height	0.00 m

Zonal Lumen Summary

Zone	Lumens
0-10	86.00
10-20	115.64
20-30	71.71
30-40	34.31
40-50	3.82
50-60	2.33
60-70	0.47
70-80	0.05
80-90	0.00
90-100	0.00
100-110	0.00
110-120	0.00
120-130	0.00
130-140	0.00
140-150	0.00
150-160	0.00
160-170	0.00

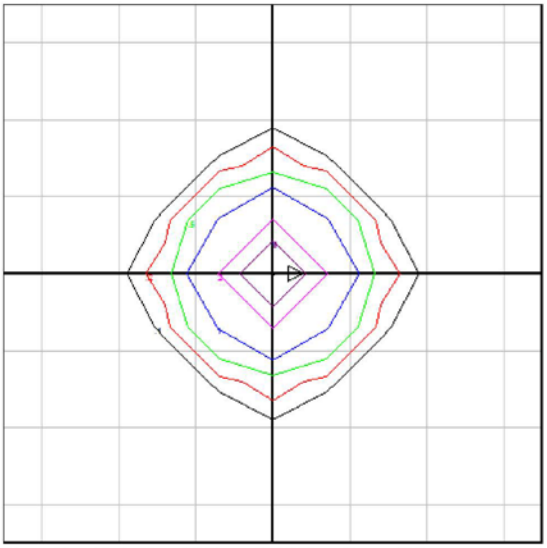

Mounting Height = 10 ft. Grid Spacing = 5 ft.

In the interest of product improvement, BEGA reserves the right to make technical changes without notice.
BEGA 1000 Bega Way, Carpinteria, CA 93013 (805)684-0533 Fax (805)566-9474 www.bega-us.com © Copyright BEGA-US 2015 **11/3/2015**

CIMARRON LED CL1S

Cat.#		
Job	Type	

SPAULDING LIGHTING

Approvals

SPECIFICATIONS

Construction:
- Stylish vertically finned die-cast solid top housing for maximum heat dissipation; Stops collection of unsightly debris
- Rugged lower die-cast aluminum heat sink optimizes thermal management and optical performance
- One piece die-cut silicone gasket with mechanically compressed stainless steel bezel ensures weather proof seal around each individual LED for IP65 rating
- Backlight Control (BC) option available for 85% spill light reduction, doesn't change fixture appearance or EPA, recommended for Type III and Type IV distributions
- Complements the Cimarron LED CL1 i
- Weight - 19 pounds, EPA - .45 ft²

Optics:
- Choice of 126 high brightness LED configurations with individual acrylic lenses specially designed for IES Type II, III, IV and V distributions
- 3000K, 80 CRI; 4000K, 70 CRI; 5000K, 67 CRI, Turtle friendly Amber

Electrical:
- Universal input voltage 120-277 VAC, 50/60 Hz
- Ambient operating temperature -40° C to 40° C
- Drivers have greater than 90% power factor and less than 10% THD
- 700mA drive current standard, 350mA and 525mA options available with 32L and 48L LED models
- LED drivers have output power over-voltage, over-current protection and short circuit protection with auto recovery
- Surge protection – 20KA; Turns fixture off at end of life; Includes LED for end of life indication (see surge suppressor page 3)
- Optional 0-10VDC continuous dimming to 10%
- Automatic thermal self-protection
- LED electrical assembly, including PR devices, consumes no power in the 'off' state

Controls:
- Drivers are 0-10V dimming standard. Photocell and occupancy sensors available for complete on/off and dimming control

Installation:
- Quick-mount plate included for easy installation
- The decorative integral arm houses two stage hinge mechanism
- Safety latch holds luminaire door to prevent "free swing"
- Quick-connect wiring for simplified, hassle-free installation
- Suitable for applications requiring 3G testing prescribed by ANSI @136.31

Finish:
- TGIC thermoset polyester powder paint finish applied at nominal 2.5 mil thickness

Warranty:
Five year limited warranty, for more information visit: http://www.hubbelloutdoor.com/resources/warranty/

Listings:
- Listed to UL1598 and CSA C22.2#250.0-24 for wet locations
- 700mA models meet DesignLights Consortium (DLC) qualifications, consult DLC website for more details: http://www.designlights.org/QPL
- IDA approved
- IP66
- IES Progress Award Winner - 2013

PRODUCT IMAGE(S)

48 LED 3/4 VIEW

16 LED

32 LED

48 LED

DIMENSIONS

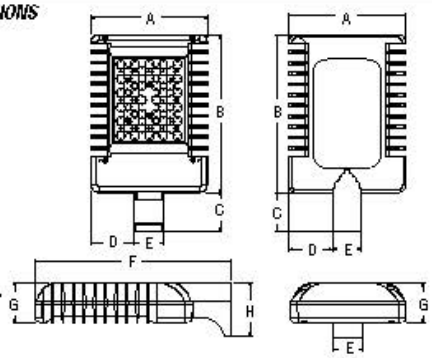

Weight
19 lbs.
8.62 kgs.

A	B	C	D	E	F	G	H
12" 305mm	16.312" 414mm	4" 102mm	4.5" 114mm	3" 76mm	20.312" 515mm	4.13" 105mm	5.625" 143mm

CERTIFICATIONS/LISTINGS

SPAULDING LIGHTING

Spaulding Lighting • 701 Millennium Boulevard • Greenville, SC 29607 • Phone: 864-678-1000
Due to our continued efforts to improve our products, product specifications are subject to change without notice.

© 2015 SPAULDING LIGHTING, All Rights Reserved • For more information visit our website: www.spauldinglighting.com • Printed in USA CL1S-SPEC 11/15

HUBBELL Lighting

LAREDO SERIES

LMC - 30LEDs

Cat.#	
Job	Type

SPAULDING LIGHTING

Approvals

SPECIFICATIONS

Intended Use:
Full cut-off IDA compliant perimeter or entry lighting for 12-18ft mounting heights that require high light output and maximum energy efficiency. Laredo LMC-30 LED wallpack provides low installation costs with little or no maintenance and 60%+ energy savings. Ideal for schools, factories, hospitals, warehouses and retail applications.

Construction:
Decorative die-cast aluminum housing and door. Rugged design protects internal components and provides excellent thermal management for over 70% lumen maintenance at 50,000 hours minimum LED life. Lektrocote® series powder paint finishes provide lasting appearance in outdoor environments. Five standard finishes include: Bronze, Black, Gray, White and Platinum.

Optics/Electrical
LED:
30 High power LEDs delivers up to 6070 lumens at 700mA and up to 3489 lumens at 350mA. Variety of distributions – Types II, III and IV (Forward throw). High CRI LEDs provide excellent color rendition with up to 100 lumens per watt efficiency.

- CCT- 5000K/ 67 CRI, 4000K/ 70 CRI, 3000K/ 80 CRI
- Electronic driver 71w system (2 drivers, 2 circuits), 0.4 AMPS max, or 35w (1 driver, 2 circuits), 0.3 amps max, 120-277V and 347V and 480V, 50/60Hz
- Surge protection – 20KA; Turns fixture off at end of life; Includes LED for end of life indication (see surge suppressor page 2)

Lenses:
Full cut-off distribution - individual acrylic LED optics provide IES Type II, III and IV distributions.

Installation:
Quick mount system provides rigid mounting over recessed junction boxes – fixture does not require opening for mounting. Foam gasket for sealing to smooth surfaces provided. Superior performance with 5 to 1 spacing to mounting height ratio. Minimum operating temperature is -40°C/ -40°F.

Controls:
Drivers are 0-10V dimming standard.
Photocell and occupancy sensor options available for complete on/off and dimming control.

Listings:
- Listed to UL1598 for wet locations
- 40° C ambient environments
- U.S. Patent No. D563,587
- DesignLights Consortium (DLC) qualified, Consult DLC website for more details: http://www.designlights.org/QPL

LMC-30LU Egress Wallpack:
Designed to meet strict 1fc minimum requirements. At 12ft mounting height 1fc covers 16x16ft area, well beyond the 10x10ft standard; No uplight, external test button; 120V or 277V only; Rated -20° C to 35° C

Warranty:
Five year limited warranty (for more information visit: http://www.hubbelloutdoor.com/resources/warranty/

PRODUCT IMAGE(S)

LMC-30LU

LMC-30LU Motion Sensor

LMC-30LU BBU

DIMENSIONS

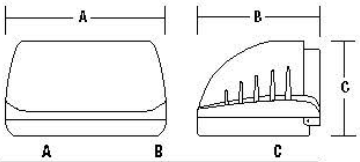

A	B	C
16.0" (406 mm)	12.125" (308 mm)	9.0" (229 mm)

ORDERING INFORMATION

ORDERING EXAMPLE: LMC-30LU-5K-3-1-PC(4)

LMC - [ ] - [ ] - [ ] - [ ] - [ ] - [ ]

SERIES	NUMBER OF LEDS/SOURCE/VOLTAGE	CCT	IES DISTRIBUTION	DRIVE CURRENT	FINISH	OPTIONS
LMC Laredo Medium Cut-off	**30LU** 30 LEDs, Universal voltage 120-277V	**3K** 3000K nominal	**2** Type II	**BLANK** STD 700MA	**1** Bronze	**BBU**[1] Integral battery for 120 or 277V rated for -20° C ambient; Available in 350mA (035) drive current only
	30L1 30 LEDs, 120V	**4K** 4000K nominal	**3** Type III	**035** 350MA	**2** Black	**PC**[1] Button photocontrol, replace X with voltage, specify 1-120V, 2-208V, 3-240V, 4-277V
	30L2 30 LEDs, 208V	**5K** 5000K nominal	**4** Type IV (Forward throw)		**3** Gray	**F**[1] Fusing (specify voltage per footnote)
	30L3 30 LEDs, 240V				**4** White	**SCP**[1,2] Programmable motion control, factory default is 10% light output
	30L4 30 LEDs, 277V				**5** Platinum	Controls Guide
	30LF 30 LEDs, 347V					
	30L5 30 LEDs, 480V					

1 PC(X) and F Replace X with 1-120V, 2-208V, 3-240V, 4-277V
2 Must order minimum of one SCP-REMOTE to program dimming settings, 0-10V fully adjustable dimming with automatic daylight calibration and different time delay settings, 120V-277V only

SPAULDING LIGHTING
Spaulding Lighting • 701 Millennium Boulevard • Greenville, SC 29607 • Phone: 864-678-1000
Due to our continued efforts to improve our products, product specifications are subject to change without notice.
© 2015 SPAULDING LIGHTING, All Rights Reserved • For more information visit our website: www.spauldinglighting.com • Printed in USA LMC-SPEC 10/15

HUBBELL Lighting

KICHLER
Style to live by™

LED 3000K Outdoor Up & Down Lantern - AZT

11251AZT30 (Textured Architectural Bronze)

Product Description:

This LED outdoor wall up and downlight features smooth lines, a modern look and a Textured Architectural Bronze finish.

Available Finishes

Textured Black
Textured Architectural Bronze

Technical Information

Safety Rated:	Wet
HCWO:	6.25
Title 24:	Yes
Color Rendering Index:	90
Color Temperature Range:	2950-3130
Expected Life Span:	40000 Hours
Operating Voltage Range:	120-277
Width:	5.00"
Height:	12.00"
Lamp Included:	Integrated
Extension:	6.50"
Voltage:	120-277V
Energy Efficient:	Yes
Light Source:	LED
Kelvin Temperature:	3000K
Max Watt:	15W
Finish:	Textured Architectural Bronze

Project	
Type	
Ordering #	
Comments	

3000 K LED Outdoor Lantern - AZT AZT

11250AZT30 (Textured Architectural Bronze)

Project Name: _____
Location: _____
Type: _____
Qty: _____
Comments: _____

Ordering Information

Product ID	11250AZT30
Finish	Textured Architectural Bronze
Available Finishes	AZT, BKT

Dimensions

Extension	6.50"
Height from center of Wall opening	3.25"
Base Backplate	5.00 X 5.00
Weight	2.60 LBS

Photometrics

Kelvin Temperature	3000K
Color Rendering Index	90

Specifications

Material	Aluminum

Electrical

Voltage	120-277V
Input Voltage	Dual (120/140)

Dimensions

Height	7.00"
Width	5.00"

Qualifications

Safety Rated	Wet
Title 24	Yes
Class 2	Yes
Dark Sky	Yes
Expected Life Span	40000 Hours
Warranty	www.kichler.com/warranty

Primary Lamping

Light Source	LED
Lamp Included	Integrated
Number of Lights/LEDs	1
Delivered Lumens	350
Delivered Efficacy	33
Max or Nominal Watt	11W

Kichler
7711 East Pleasant Valley Road
Cleveland, Ohio 44131-8010
Toll free: 866.558.5706 or kichler.com

Notes:
1) Information provided is subject to change without notice. All values are design or typical values when measured under laboratory conditions.
2) Incandescent Equivalent: The incandescent equivalent as presented is an approximate number and is for reference only.

KICHLER

A850 OLD TOWN SERIES

HID

EPA 1.21 (ft²)
WEIGHT 15 LBS

5 YEAR WARRANTY

MAXIMUM WATTAGE 250W

UL LISTED

JOB NAME

FIXTURE TYPE

MEMO

BUILD A PART NUMBER

ORDERING EXAMPLE: 2A-A850-5P-100HPS120-MED-RE5-A-PEC-FHS/50PM/4212FP4/BKT

Mounting Config.	Fixture	Fitter	Ballast	Volts	Socket	Optic	Lens	Option Ring	Option Photocontrol	Option GFI	Option Term. Block	Option Fuse	Option Lamps See Lamp Spec Sheet	Arm See Arm Spec Sheets	Pole See Pole Spec Sheets	Finish

Mounting Configuration

(Click here to view mounting configuration sheet)

- 1W
- 2A
- 3A90
- 1AM
- PT
- 2A90
- 3APT
- 2AM
- 1A
- 2APT
- 4A
- 460PB
- 1APT
- 3A
- 4APT

W = Wall Mount, PT = Post Top, APT = Post Top Arm Mid Mount, A = Arm Mount, AM = Arm Mid Mount, PB = Pole Base

Fixture

- A850
- A850SR

Fitter

- 5P
- 991
- 995
- OLF3
- 73
- 992
- BD4
- OLF4
- 74
- 993
- BD5
- 588
- 990
- 994
- BD7
- C2097

Add "T" after fitter designation for tenon, and "Tees" after fitter.

Ballast[2,3]

- 35HPS[1]
- 70MHP
- 42CFL
- 50HPS
- 100MHP
- 57CFL
- 70HPS
- 150MHP
- 70CFL
- 100HPS
- 200MHP
- 55QL
- 150HPS
- 250MHP
- INCAND
- 250HPS
- 26CFL
- 50MHP
- 32CFL

[1] Medium base socket standard with ballast up to 150 watts.
[2] Mogul base socket standard with ballast 200 watts and over. 4 PIN for CFL.
[3] Metal halide ballast not available.
[4] 35 HPS is 120 volt only.

Volts

- 120
- 208
- 240
- 277
- 347
- 480

Socket

- MED
- MOG
- QL
- 4P (4-PIN)

Optic

- NONE
- RE3
- RE5
- LO3
- LO5
- ALZAK
- HSS

Lens

- A (Acrylic)
- P (Polycarbonate)
- WA (White Acrylic)
- WP (White Polycarbonate)

Options

- CDR Cast Decorative Ring
- CDR-CL[1] Cast Decor Ring with Custom Logo
- PBDR[2] Perforated Brass Decorative Ring
- PEC Electronic Photocontrol 120-277 Volt
- RI[3] Receptacle Only for Twist-Lock Photocontrol
- RII[3] Twist-Lock Photocontrol & Receptacle (120V-277V)
- G[4] 15A Duplex GFI for Utility Fitter
- TB[5] Terminal Block
- FHS[6] Single Fuse & Holder - 120, 277 Volt
- FHD[6] Dual Fuse & Holder - 208, 240, 480 Volt
- LAMPS See Lamp Spec Sheet

[1] Contact factory for specifications and details.
[2] Standard on all arms. Not available in conjunction with PBDR.
[3] For 900 series utility fitter only.
[4] Shipped accessory, not installed in base.
[5] Shipped accessory, not installed in base.

Arm (Click here to view arm website page)

See Arms & Wall Brackets specification sheets.

- 50
- 70
- 480
- 6236
- TA
- BA
- 478
- 80
- 55
- 579
- TASCR

Pole (Click here to view pole website page)

See Pole specification sheets.

Finish (Click here to view paint finish sheet)

Standard Finishes[1]

- BKT Black Textured
- WHT White Textured
- PGT Park Green Textured
- ABZT Architectural Medium Bronze Textured
- DBT Dark Bronze Textured

[1] Stock finishes are available as shown in quotes.

Custom Finishes[1]

- CM Custom Match
- OI Old Iron
- RT Rust
- WBR Weathered Brown
- CD Cedar
- WBK Weathered Black
- TT Two Tone

[1] Custom colors require surcharge.

Sternberg Select Finishes

- VG Verde Green
- SI Swedish Iron
- OWGT Old World Gray Textured

Specifications

Fixture

The fixture shall be 16" in diameter and 39-1/2" tall. It will be made of vandal resistant clear textured polycarbonate or dent resistant (DR) clear textured acrylic. White textured is also available. The fixture is available in a solid roof (A850SR) for added distinction and reduced up-light. The solid roof will be made of spun aluminum and securely affixed to the top of the acorn. The optional perforated brass decorative ring (PBDR) is available in polished brass or painted finish. The 2-1/4" wide brass filigree allowing light transfer through decorative openings. The optional CDR is a heavy cast aluminum ring with four cast medallions finished in accent gold. Also available are custom medallions that can be specified with a name, initial or logo.

Fitter - Standard

The fitter shall be heavy wall cast aluminum, 356 alloy for high tensile strength. It shall have an 9-1/2" inside diameter opening to attach to the 9" neck of the acorn globe. When ordered with a Sternberg aluminum pole, the fitter shall be welded to the pole top or tenon for safety and to ensure the fixture will be plumb, secure and level over the life of the installation. The fitter shall have a one-piece ring bug gasket to resist insect penetration into lamp assembly.

900 Series Utility Fitter Option

The fitter shall be heavy wall cast aluminum, 360 die cast alloy for high tensile strength. It shall have a 9-1/4" inside diameter opening to attach to the 9" neck of the acorn globe. It shall have a hinged, tool-less entry door that provides open access to all of the components. The 900 series shall have an optional terminal block for ease of wiring, an optional Twist-Lock Photocontrol receptacle, an optional single GFCI outlet for auxiliary power needs. The top mounted ballast mounting plate shall be cast aluminum and provide tool-less removal from the housing using 2 finger latches. When ordered with a Sternberg aluminum pole, the fitter shall be set screwed to the pole top or tenon. The fitter shall have a one-piece ring bug gasket to resist insect penetration into lamp assembly.

See next page

SternbergLighting
ESTABLISHED 1923 / EMPLOYEE OWNED

800-621-3376
555 Lawrence Ave., Roselle, IL 60172
info@sternberglighting.com
www.sternberglighting.com

8/18 STERNBERG LIGHTING. ALL RIGHTS RESERVED. PRINTED IN THE USA.

MATCH EXISTING STREETSCAPE – LED OPTIONAL

ATLANTIS RAIL SYSTEMS

OR EQUIVALENT

DESIGN PARAMETERS **SUNRAIL™ GLASS**

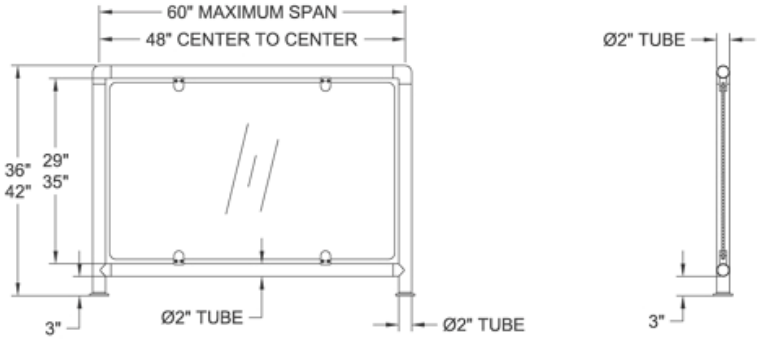

Specifications:
Recommended span: 48" between posts (60" max.)

Handrail: 2" diameter 16 gauge 316 grade stainless steel tubing

Infill: Provided by customer, 5/16" to 3/8" thick tempered glass or equivalent

Posts: 2" diameter 16 gauge 316 grade stainless steel tubing

Top and bottom rails are secured to posts using 316 grade cast stainless steel fittings.

70 Armstrong Road ■ Plymouth, MA 02360
800-541-6829 ■ info@atlantisrail.com ■ www.atlantisrail.com

ATLANTIS RAIL SYSTEMS

OR EQUIVALENT

DESIGN PARAMETERS **SUNRAIL™ NAUTILUS**

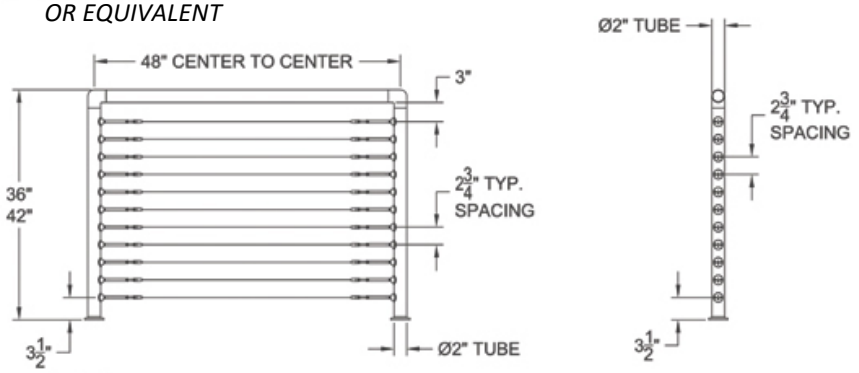

Specifications:
Recommended span: 48" max. between posts
Cables may pass through posts on longer spans.

Handrail: 2" diameter 16 gauge 316 grade stainless steel tubing

Infill: RailEasy™ Tensioners with 1x19 316 grade stainless steel tubing

Posts: 2" diameter 16 gauge 316 grade stainless steel tubing

Top and (optional) bottom rails are secured to posts using 316 grade cast stainless steel fittings. Tensioners are riveted to posts.

70 Armstrong Road ■ Plymouth, MA 02360
800-541-6829 ■ info@atlantisrail.com ■ www.atlantisrail.com